# EKSTAND Installation Guide

THIS DOCUMENT REPLACES THE MANUFACTURER DOCUMENTATION

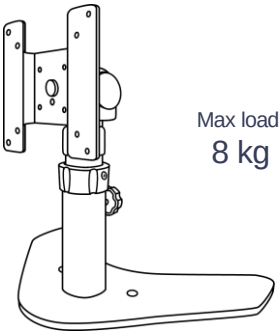

Max load:
8 kg

Product Number: EKSTAND 9262-0221 Iss.1

## COMPONENTS

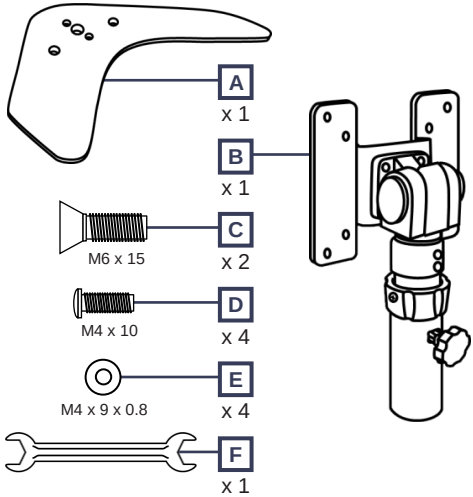


1

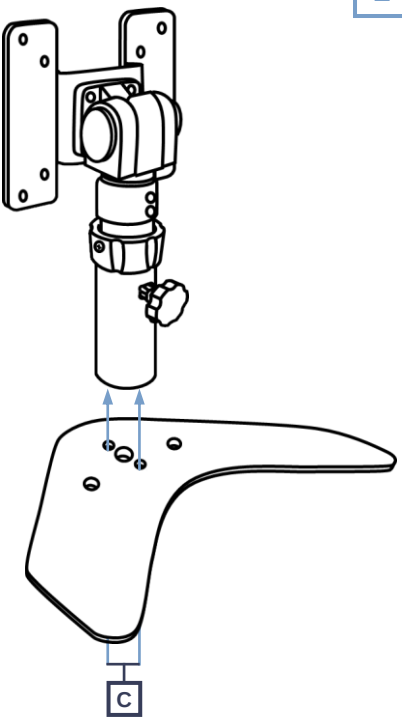


2

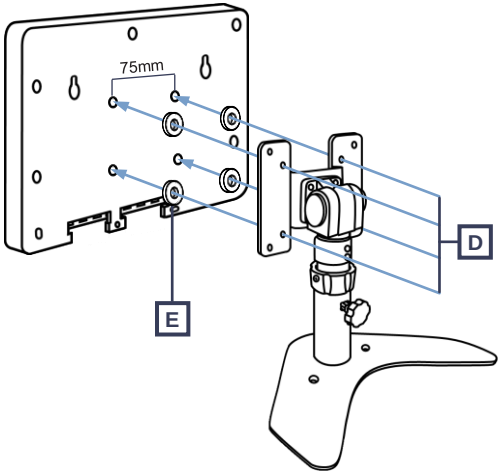


3

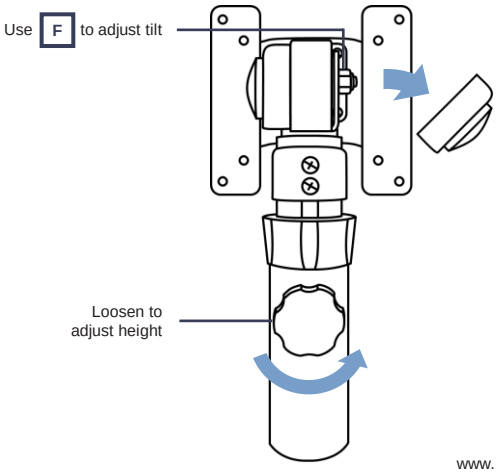


© Multitone Electronics plc, Multitone House,
Shortwood Copse Lane, Basingstoke, Hants, RG23 7NL

EKSTAND